Installation Instructions

MPN.: AI-U-M6-BLK-01/0908A

Important Safety Instructions

Read & understand all these safety instructions before using the product.

Do not mount the Desk Base or Wall Mounted Bracket of the Arm on an unstable surface or any surface that could not mount the Desk Base or Bracket firmly.

For safety reasons, the internal gas-strut of the LCD Arm product was pre-adjusted in the factory to a lowest force to prevent the Arm body from being recoiled during installation.

During installation, beware of the recoil of the Arm body when attaching or detaching the LCD monitor to the Arm. As the internal gas-strut of the LCD Arm has been adjusted with a reserved force to hold the original or existing LCD monitor, always re-adjust the gas-strut to a lowest force level to control the recoil of the Arm body when changing the LCD monitors otherwise the Arm may be recoiled when the original or existing LCD monitor is detached and may cause damage or injury.

Do not attempt to disassemble, service or modify the product by yourself.

Use only a slightly damp cloth to clean the Arm surface. Never use flammable solvents like alcohol, benzene, thinner, etc. to the product.

Do not use or mount any unsuitable / oversized / non-standard monitors on our product. For assistance, please contact your local distributor or agent.

Installation Instruction: AMT611 / AMT621 / AMT610 / AMT620

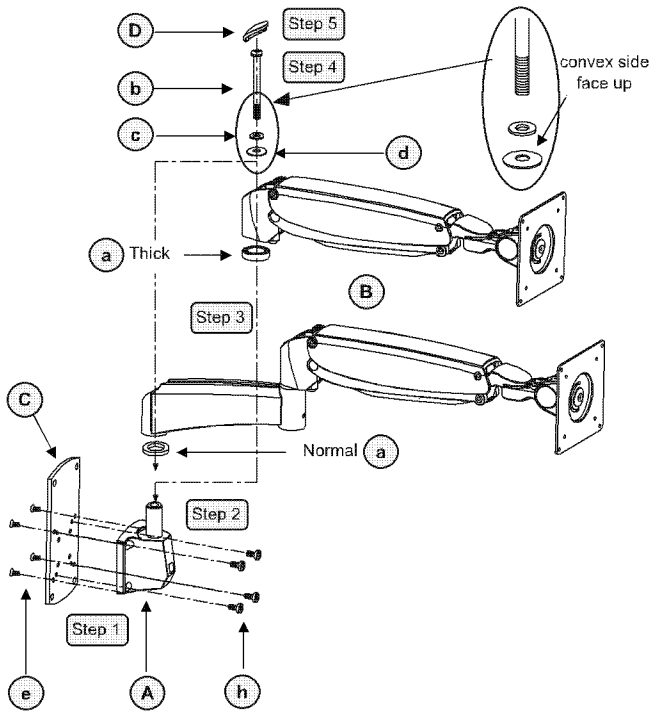

Steps:

1. Mount (C)Wall Plate to the Wall Mounted Bracket and tighten (e)M4 Flat Head Cap Screw with (g)M2.5 Hex Wrench. Tighten (h)M5 Round Head Screw with screwdriver (customer provided).
2. Put (a)Plastic Spacer over (A)main shaft of Wall Mounted Bracket.
3. Put (B)Arm Assembly onto the main shaft.
4. Insert (b), (c) and (d) into Arm Assembly and tighten with (f)M5 Hex Wrench.
5. Snap (D)Plastic Cap into the top of Arm Assembly.

Components

A Wall Mounted Bracket

x1

B Arm Assembly

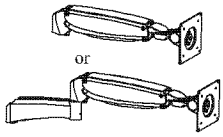

x1

C Wall Plate

x1

D Plastic Cap

x1

Fasteners

a Plastic Spacer

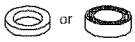

Normal Thick

x1

b M8 x 90 Round Head Cap Screw

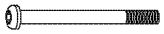

x1

c Washer

x1

d Disc Spring Washer

x1

e M4 Flat Head Cap Screw

x4

f M5 Hex Wrench

x1

g M2.5 Hex Wrench

x1

h M5 Round Head Screw

x4

Installation Instruction: AMK611 / AMK621 / AMK610 / AMK620

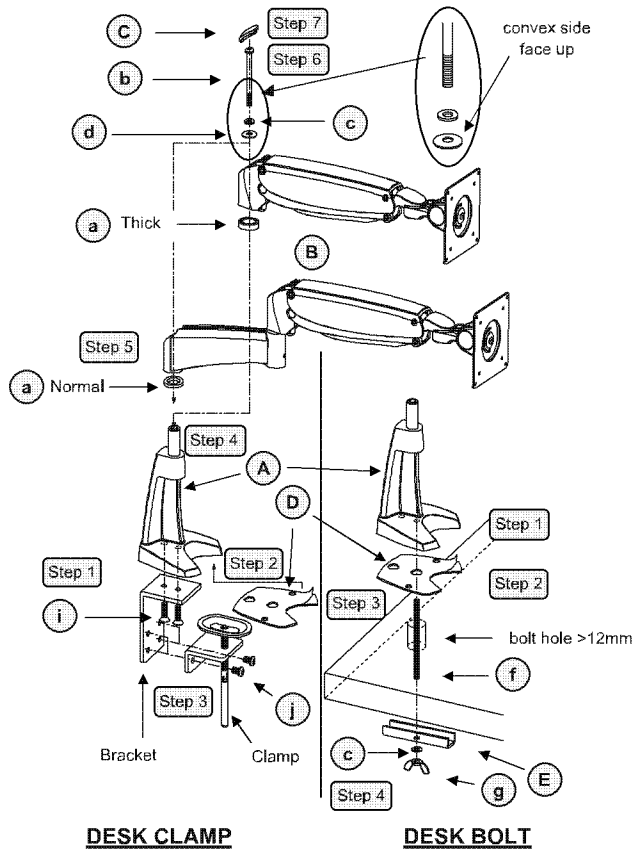

Steps:

Desk Clamp:

1. Mount Bracket to Desk Base then tighten (i)M8 Flat Head Cap Screw with (e)M5 Hex Wrench.
2. Attach (D)Base Cushion to (A)Desk Base.
3. Put Desk Base onto work surface then mount Clamp to the Bracket then tighten (j)M8 x 12 Round Head Cap Screw with (e)M5 Hex Wrench.
4. Put (a) Plastic Spacer over (A) main shaft of Desk Base.
5. Put (B)Arm Assembly onto the main shaft.
6. Insert (b), (c) and (d) into Arm Assembly and tighten with (e)M5 Hex Wrench.
7. Snap (C)Plastic Cap into the top of Arm Assembly.

Desk Bolt:

1. Remove the Bracket from (A)Desk Base with (e)M5 Hex Wrench.
2. Attach (D)Base Cushion to (A)Desk Base (Please refer template on P.9).
3. Put Desk Base directly on the bolting hole of work surface and tighten (f)M8 Thread Rod with (h)M4 Hex Wrench.
4. Insert (E)U Bracket & (c)Washer through (f)M8 Thread Rod and tighten them with (g)Wing Nut.
5. Repeat Desk Clamp Step 4 to 7.

Components

A Desk Base with Clamp — or — x1

B Arm Assembly — or — x1

C Plastic Cap — x1

D Base Cushion — x1

E U Bracket — x1

Fasteners

a Plastic Spacer — Normal or Thick — x1

b M8 x 90 Round Head Cap Screw — x1

c Washer — x2

d Disc Spring Washer — x1

e M5 Hex Wrench — x1

f M8 Thread Rod — x1

g Wing Nut — x1

h M4 Hex Wrench — x1

i M8 Flat Head Cap Screw — x2

j M8 x 12 Round Head Cap Screw — x2

Optional Installation

(a)Set Screw(s) may be applied to the Extension, Desk Base or Wall Mount Bracket to provide extra security to connect the Arm Assembly, Extension, Desk Base and Wall Mount Bracket. Simply put and tighten (a)Set Screw in front of the Extension, Wall Mount Bracket or at the back of the Desk Base, with (b) M2.5 Hex Wrench as indicated below.

Note
Without installing the Set Screw(s) will NOT affect the function of the product.

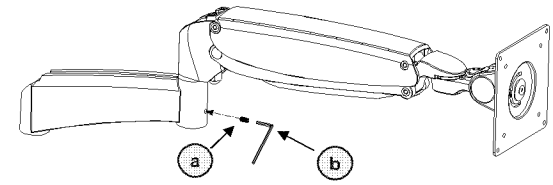

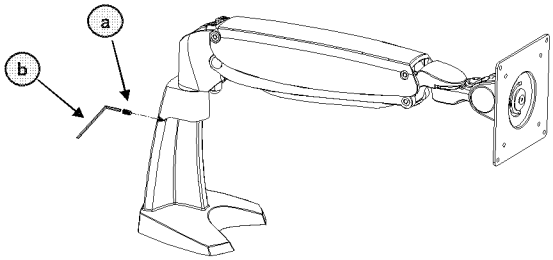

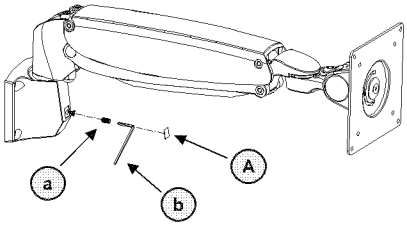

IMPORTANT
The Set Screw(s) MUST BE REMOVED before you turn the M8 x 90 Round Head Cap Screw on the Forearm or the Extension either in clockwise direction to tighten or in anti-clockwise direction to loosen it. Otherwise, the head of the M8 x 90 Round Head Cap Screw may be worn off and/or the thread of it may be stripped which may result in the M8 x 90 Round Head Cap Screw cannot be removed and/or the Forearm or Extension cannot be disassembled from the Extension, Desk Base or Wall Mount Bracket without damaging the product.

Components

A Plastic Cover

x1

Fasteners

a Set Screw

AMK610/620 x1
AMT610/620 x1
AMK611/621 x2
AMT611/621 x2

b M2.5 Hex Wrench

x1

LCD Monitor Attachment

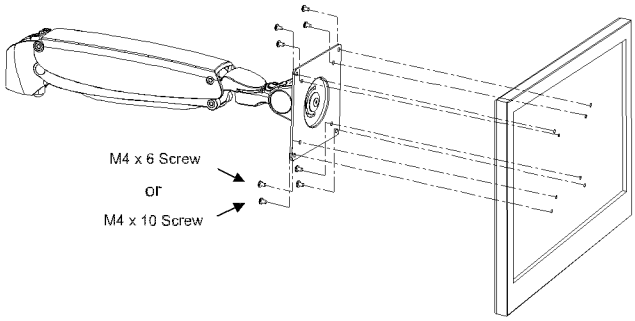

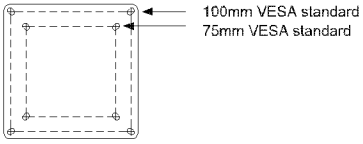

The combination 75/100mm VESA plate is pre-mounted to the Arm.

Mount the LCD monitor directly to the front plate of the Pivot Joint with the supplied M4 x 6mm (or M4 x 10mm) screws or screws provided by the manufacturer. For 100mm x 100mm or 75mm x 75mm standard, use the 4 outer corner holes or 4 inner corner holes on the front plate respectively.

IMPORTANT

It is strongly recommended to use the mounting screws provided by the LCD monitor manufacturer. Due to the varieties of monitor mounting design, the mounting holes at the back of the LCD monitor might not be suitable for the M4 screws provided by our product. Using unsuitable mounting screws might cause damage to the LCD monitor. Please consult your LCD monitor manufacturer if you have enquires.

Fasteners

a M4 x 10 Screw

x4

and

M4 x 6 Screw

x4

Cable Management

FOREARM

Put the cable(s) into the Arm inside, place Holding Tab(A) at the bottom of the Arm, slide from the middle inlet to the end of each side.

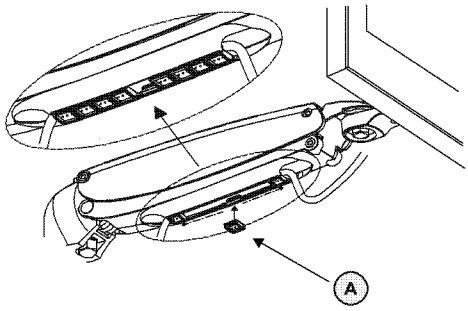

EXTENSION

Secure the cables by the hook and loop ties at the bottom of the Extension.

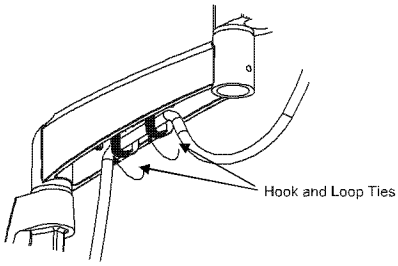

DESK BASE

Attach the Cable Clip(B) to the back of the Desk Base with the supplied M3 Screws(a) and put the cable(s) into the Cable Clip.

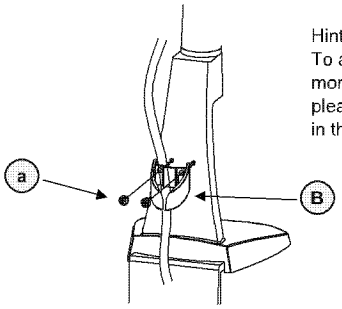

Hints:
To allow free movement of monitor and Arm/Extension, please leave sufficient slack in the cable(s).

Components

A Holding Tab

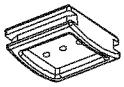

x8

B Cable Clip

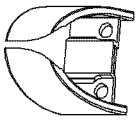

x1

Fasteners

a M3 Screw

x2

Arm Adjustment

Adjust the Pivot-Joint for Tilt Action

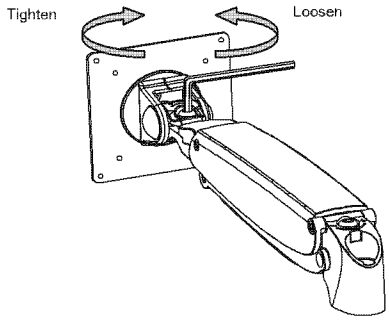

Depending on the weight of the LCD monitor, adjustments may be required to the pivot joint mechanism. If the monitor doesn't hold its position or is too tight, adjust the tensioning screw located top of the pivot joint (clockwise to tighten, anti-clockwise to loosen). Check the monitor, and then adjust again if necessary.

The structural design of our product can support LCD panels up to 25lbs (or 11.4kg). However, the capacity and actual performance could vary under different usage environment and on monitors of different sizes, widths, heights, thicknesses, positions of centre of gravity, positions of VESA mount, etc.

Vertical Movement

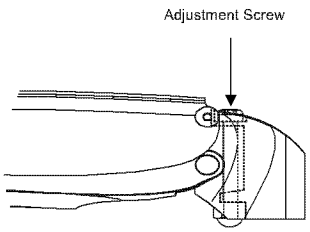

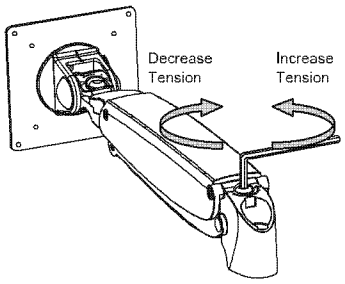

Horizontal Position

Depending on the weight of the monitor, adjustments may be required to the Arm, this can be done by using the M5 Hex wrench provided.

If the Arm tends to drift down or rise up when positioned, it will be necessary to make small adjustments at the Adjustment Screw. The above shows the adjusting method. The M5 Hex wrench provided should be used to make this adjustment.

If the Arm tends to rise, the M5 Hex Wrench should be turned clockwise to decrease the tension until the Arm reaches a stable position.

If the Arm tends to fall, the M5 Hex Wrench should be turned anti-clockwise to increase the tension until the Arm reaches a stable position.

IMPORTANT

When performing this adjustment, the Arm must be in a HORIZONTAL position – as shown above. To prevent damage to the aluminum Arm body, remove the M5 Hex Wrench before releasing the Arm from the horizontal position.

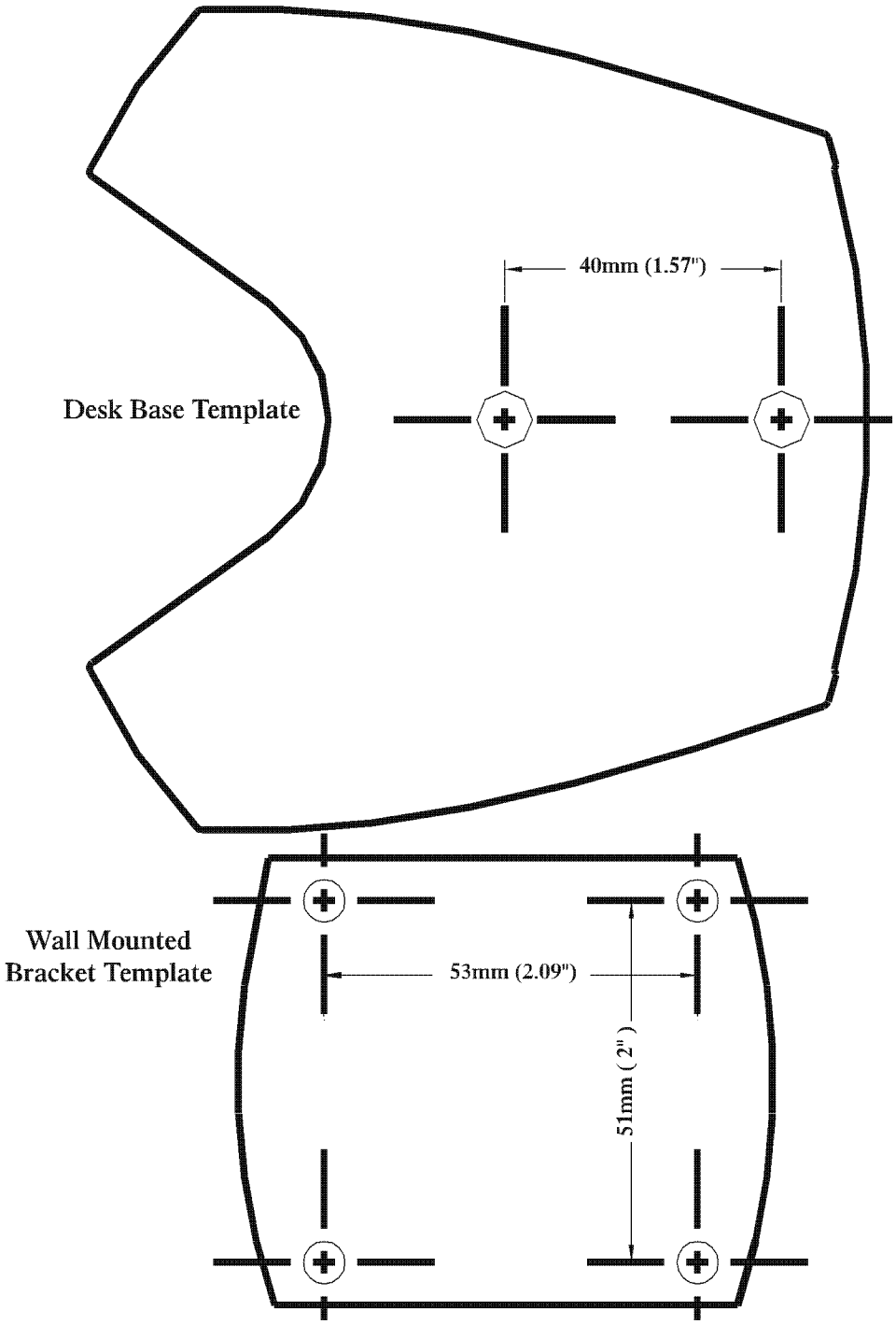
40mm (1.57")
Desk Base Template
Wall Mounted
Bracket Template
53mm (2.09")
51mm (2")

The manufacturer reserves the right to make changes to its products without notice.
No liability is assumed for any misprinting or error in this publication. Copyright 2008. All rights reserved.